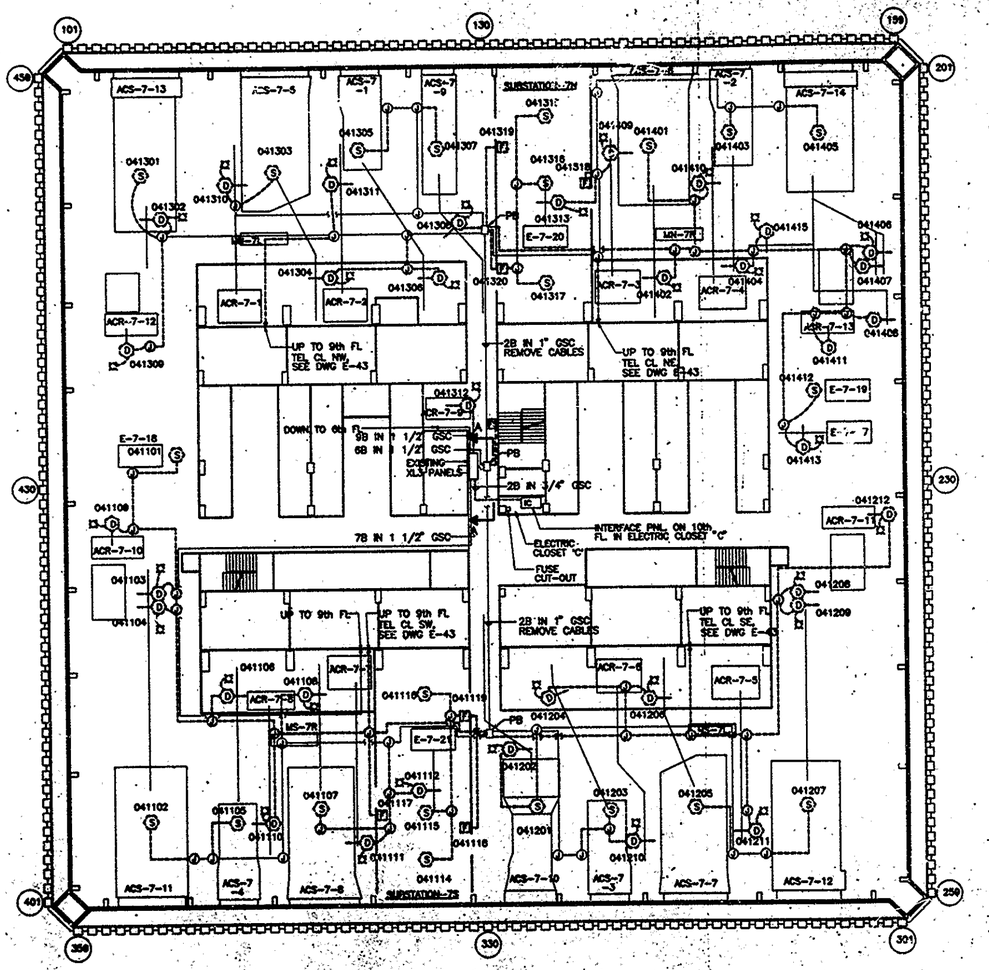

1 WTC 7th FLOOR MER REMOVAL PLAN

0 16 32
SCALE IN FEET

NOTES:

1. FOR LEGEND, ABBREVIATIONS & GENERAL NOTES, SEE DWG E-1.

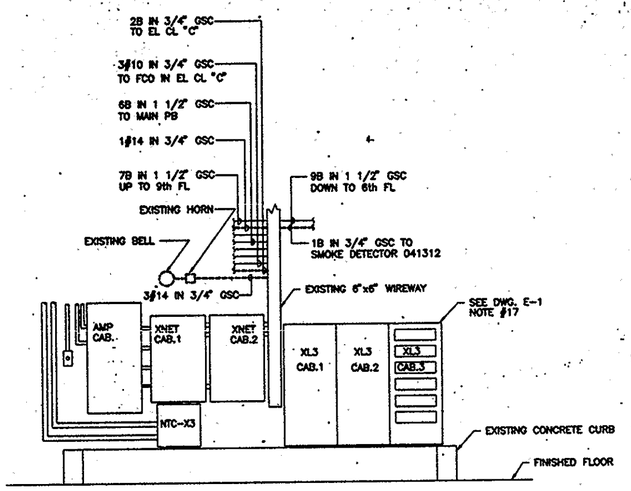

ELEVATION A–A

N.T.S.

I HEREBY CERTIFY THAT THIS IS A TRUE AND CORRECT COPY OF ONE OF THE CONTRACT DRAWINGS CONSTITUTING A PART OF CONTRACT NO. WTC-981.082 IN THE FORM IN WHICH SAID DRAWINGS EXISTED AT THE TIME THE SAID CONTRACT WAS EXECUTED BY THE PARTIES.

DATE 2/1/00 CONTRACT ENGR./ARCH.

DATE 2/1/00 ENGINEERING PROGRAM MGR.

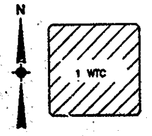

KEY PLAN

Sheet 10 of 68

THE PORT AUTHORITY OF NY & NJ

ENGINEERING PROGRAM MANAGER WORLD TRADE

CHIEF ELECTRICAL ENGINEER

No.	Date	Revision	Approved

Engineering Department
Design Division

The World Trade Center

Title

FIRE ALARM SYSTEM PHASE III XL3 CONVERSION

ELECTRICAL

1 WTC 7th FLOOR MER REMOVAL PLAN

This drawing subject to conditions in contract. All inventions, ideas, designs, and methods herein are reserved to Port Authority and may not be used without its written consent.

Designed by ROYZMAN FELDSTEIN Drawn by ROYZMAN Checked by A.S.

Date 5-20-99 Scale AS NOTED

Contract Number WTC-981.082 Drawing Number E-6